Future Prospects for Maintenance and Inspection Using Digital Technology

Yuichi Serizawa
Forum of Electrical Safety Inspection Associations

Introduction

- As part of our aim to prevent electrical fires, electric shocks, and secondary incidents (widespread power outage incidents that involve surrounding areas), we are working to upgrade our security systems with digital technology.

- We are studying systems for detecting early signs of incidents by installing multiple sensors in high- and low-voltage equipment in electric facilities for private use and monitoring these equipment constantly.

- By introducing digital technology, we will use sensors to monitor what can be monitored by sensors and have engineers conduct inspections for what can only be inspected by engineers. In doing so, we aim to increase the value of engineers' labor and improve our levels of security, as well as look into new inspection methods that are suited for the years ahead.

Overview of monitored items

(1) At the responsibility demarcation point with the power company, a switch equipped with an insulation monitoring function is installed, primarily to monitor high-voltage equipment downstream of the high-voltage lead-in cable.

(2) Various sensors are installed in the cubicle, primarily to monitor the high-voltage receiving and transforming equipment inside the cubicle.

(3) Low-voltage insulation monitoring equipment is installed on the secondary side of the transformer to monitor all equipment used, including low-voltage wiring.

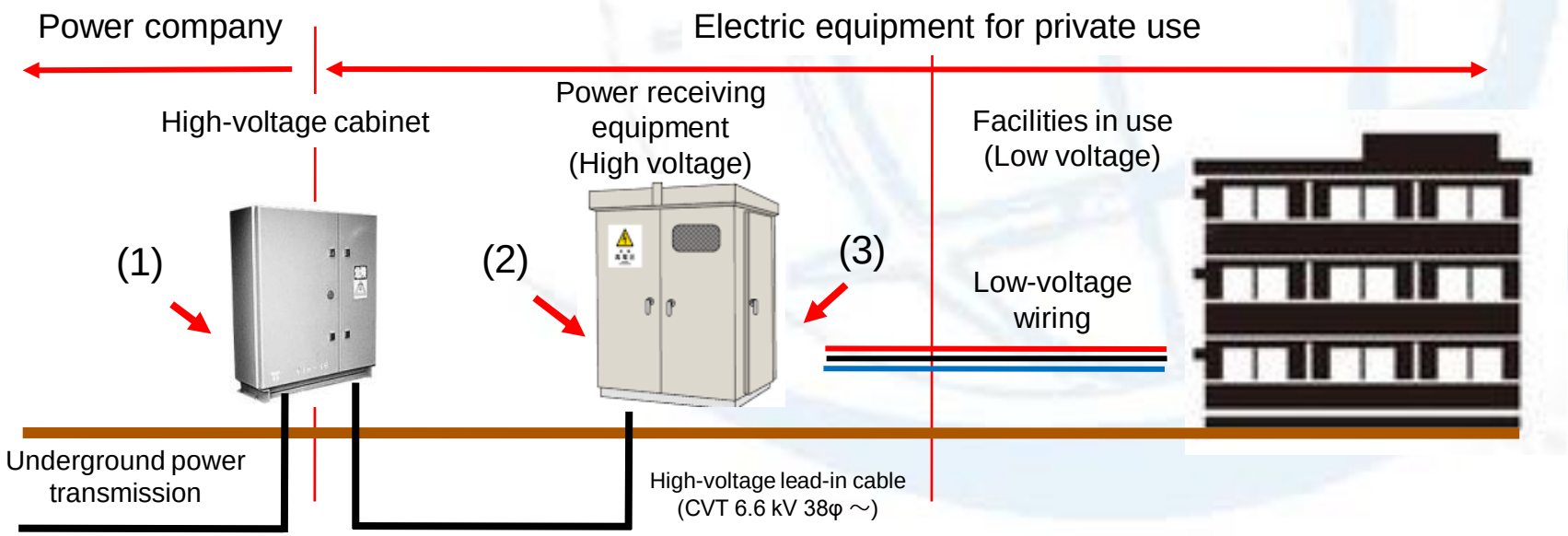

Monitoring high-voltage equipment

- The high-voltage cabinet is the receiving point, and the point of responsibility demarcation with the power company.
- Power company equipment are to the left of this, and private facilities are to the right.
- The gas switch shown on the right is installed to constantly monitor the insulation conditions of high-voltage equipment.

Example of installation

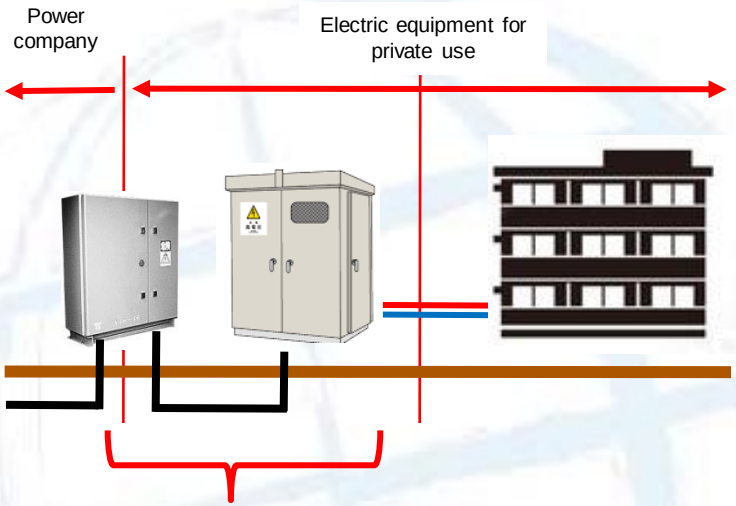

Cabinet interior

Gas switch with insulation monitoring function for 6.6 kV

Effects of switches equipped with insulation monitoring function

In particular, there are hopes that they will be able to detect the following two items:

- Detect signs of ground faults in high-voltage lead-in cables
- Detect micro ground faults in high-voltage equipment caused by tree contact, or bird or animal intrusion, etc.

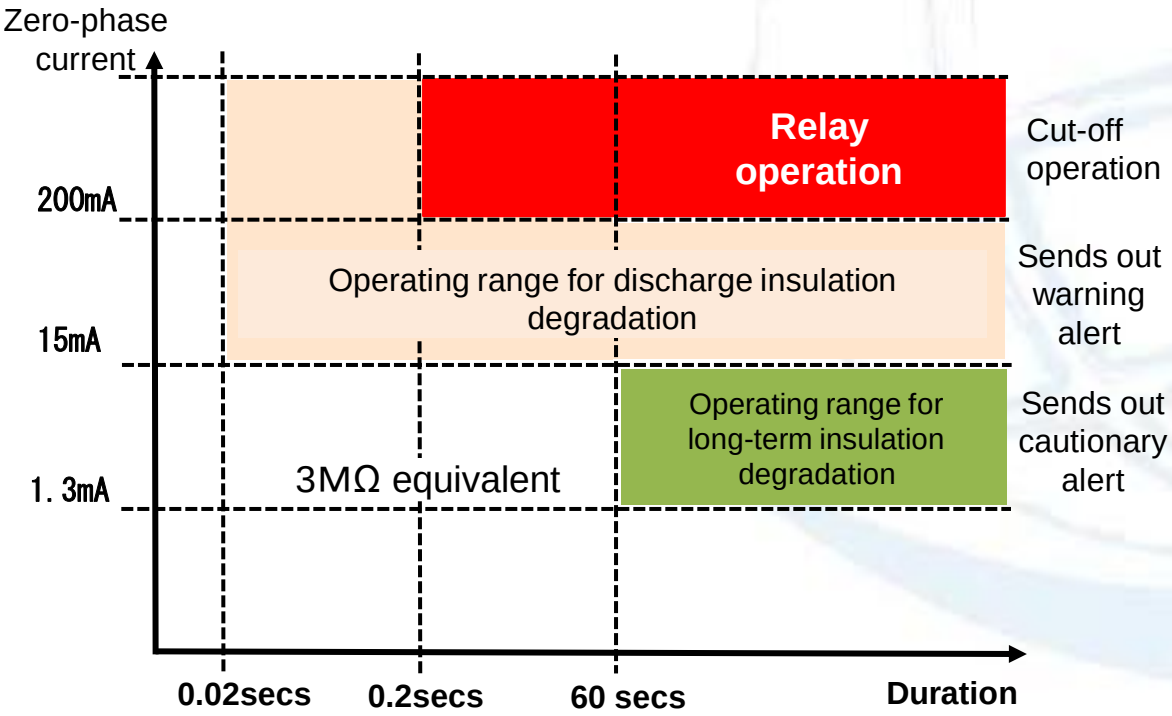

Monitoring receiving and transforming equipment

- The inside of cubicles are constantly monitored by a wide variety of sensors.
- Information on current and voltage values as well as the status of monitoring are transmitted to the server via a gateway.
- The received information is analyzed on the server by AI, and if necessary, instructions for on-site response are sent to the center.

Visual camera (fixed)

Thermal imaging camera
Checks are performed for any abnormal heating

Odor sensor

Gateway

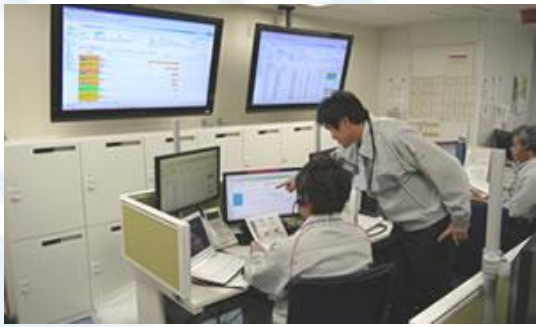

Low-voltage insulation monitoring

Ground fault current suppressor

Water leak sensor

Low-voltage insulation monitoring equipment and ground fault current suppressor

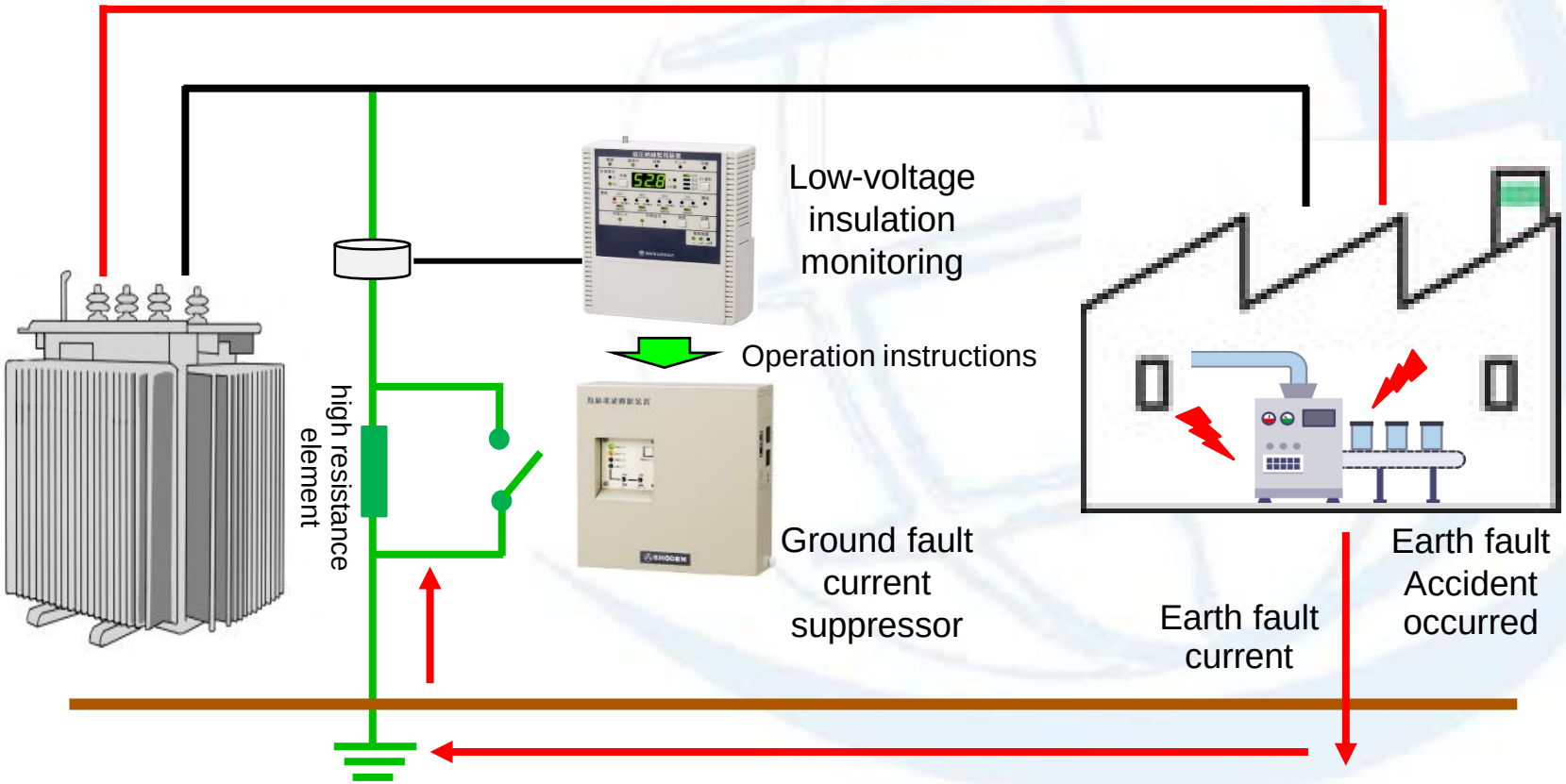

Schematic of the overall structure of the monitoring system

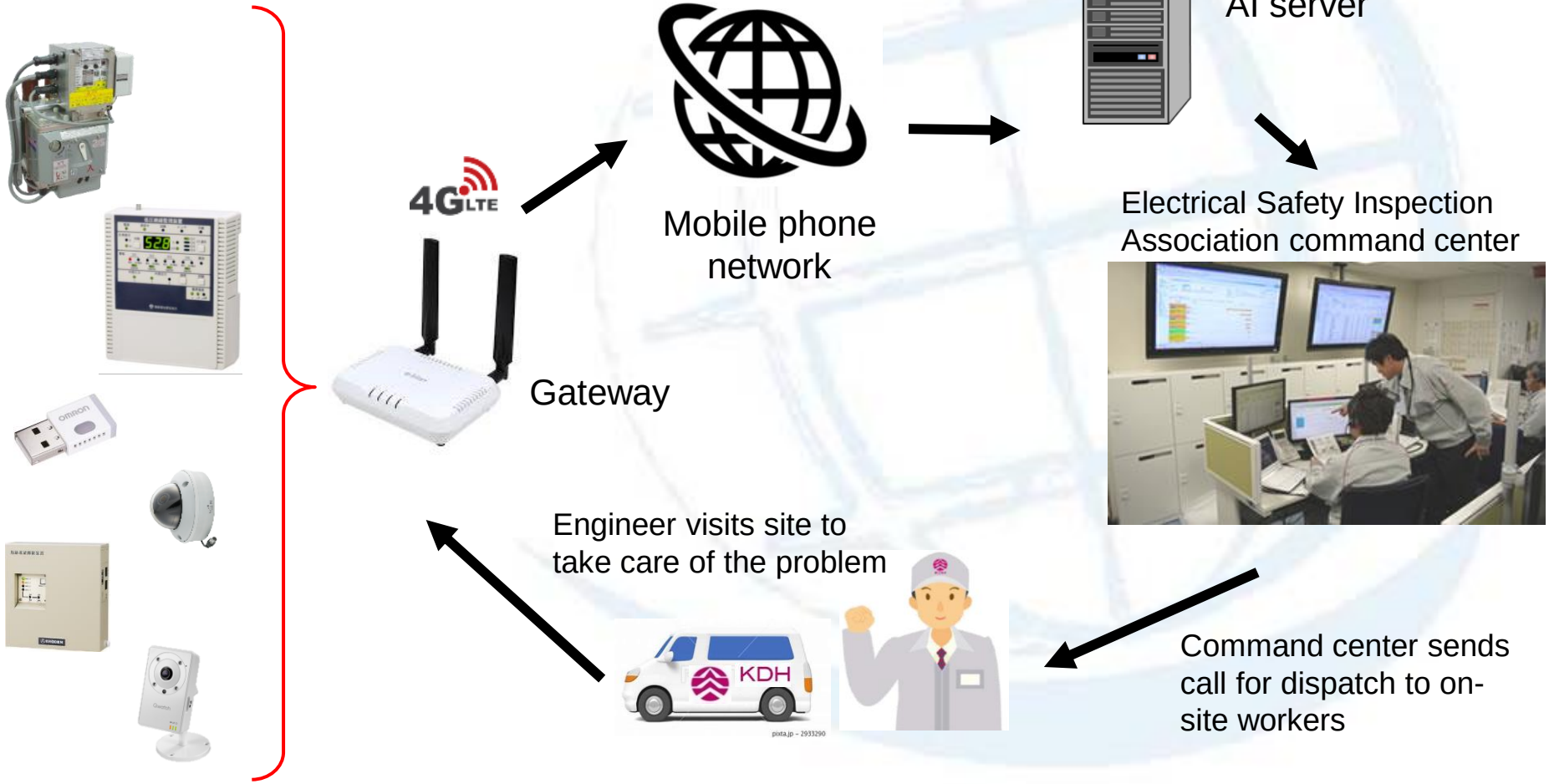

In closing . . .

The monitoring system introduced here is already an established technology for the low-voltage side, but technologies for the high-voltage side are still in the study stage.

In particular, thorough verifications need to be carried out going forward through field tests and other means for the items that require monitoring, alert levels, and response upon receiving alerts.

At FESIA, we are committed to continue to further improve electricity security so that users are able to use electricity safely and with peace of mind.